ARMREST FEATURES

100mm
PU fixing

Height adjustment
100mm

Height adjustment
80mm

Width adjustment
40mm

Quick assembly
system

Lock at
any position

Quick Assembly 2.0

Pad can be removed by simply enter a paper clip.

Push in, towards your armrest, and move back the pad .

CH-830Q

features

100h Q

Armrest carrier in plastic.
Height adjustment100mm.
54mm mounting pattern.
Quick Assembly system.

colour options

white grey black

Pad optional available

CH-295 PU ,CH-296 PU ,
CH-297 PU ,CH-298 PU ,
CH-215 PU ,CH-219-2 PU

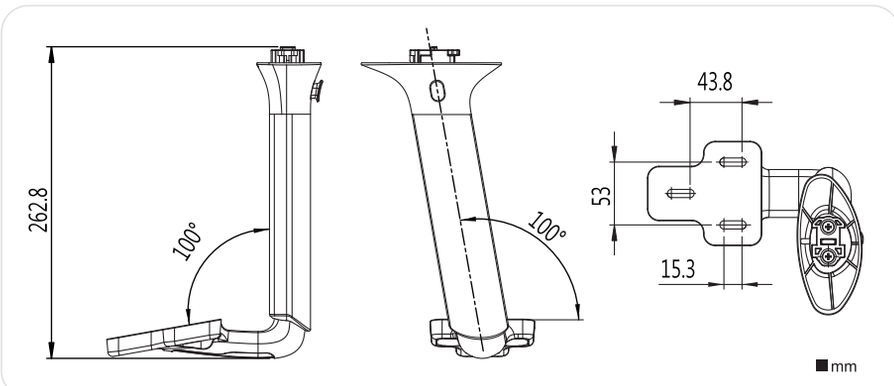

CH-835Q

features

100h Q

Armrest carrier in plastic.
Height adjustment100mm.
Slot style mounting.
Quick Assembly system.

colour options

white grey black

Pad optional available

CH-295 PU ,CH-296 PU ,
CH-297 PU ,CH-298 PU ,
CH-215 PU ,CH-219-2 PU

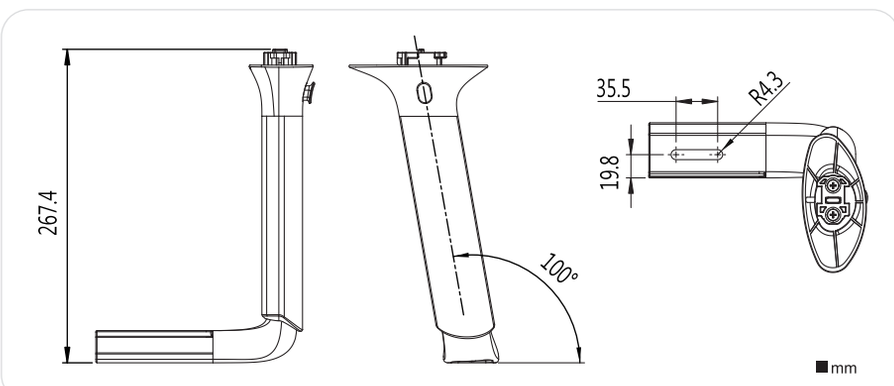

All spec. are for general viewing only.

CH-800-288

features

Plastic armrest with 3D armpad.
100mm height adjustment.
54mm mounting pattern.
SB016-width adjustment 40mm.

colour options

white | grey | black

pad function

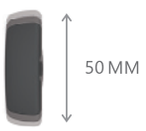

width adjuster

SB016

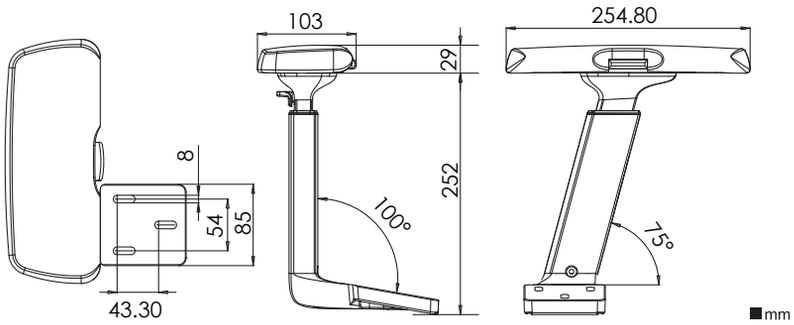

CH-800-299

features

Plastic armrest carrier with inward slide
PU Pad.
Height adjustment 100mm.
SB016-width adjustment 40mm.

colour options

white | grey | black

pad function

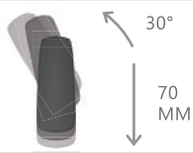

width adjuster

SB016

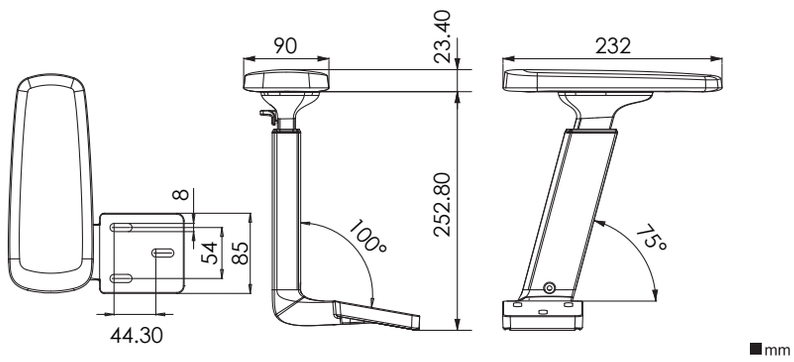

All spec. and rights are subject to change without notice.

CH-800-295

features

Plastic armrest carrier with depth and swivel Pad lock at any position.
Height adjustment 100mm.
SB016-width adjustment 40mm.

colour options

white | grey | black

pad function

width adjuster

SB016

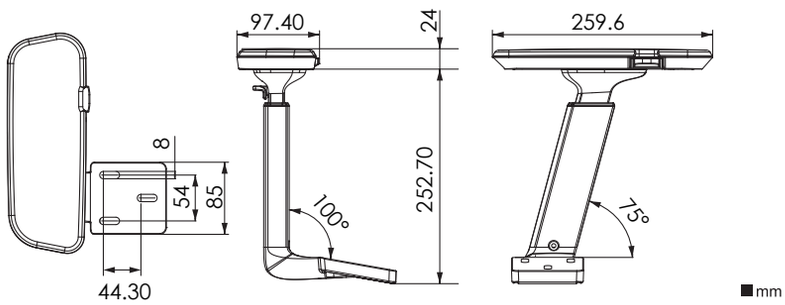

CH-801

features

Armrest carrier in plastic.
100mm height adjustment.
100mm PU Pad fixed hole.
SB016-width adjustment 40mm.

colour options

white | grey | black

Pad optional available

All fixed PU Pads

width adjuster

SB016

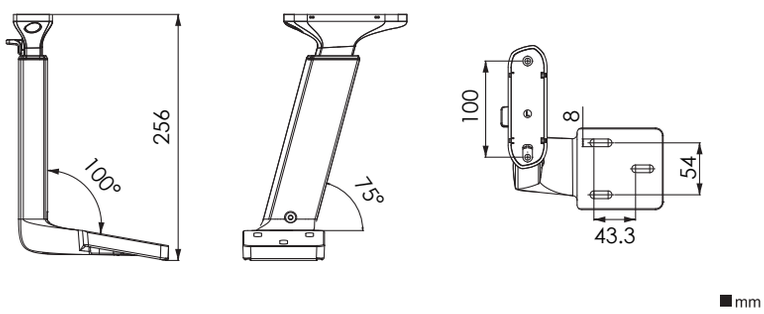

All spec. are for general viewing only.

CH-802A-288

features

Aluminum armrest with 3D armpad.
100mm height adjustment.
54mm mounting pattern.
SB016-width adjustment 40mm.

colour options

white grey black

pad function

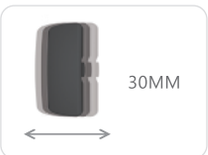

width adjuster

SB016

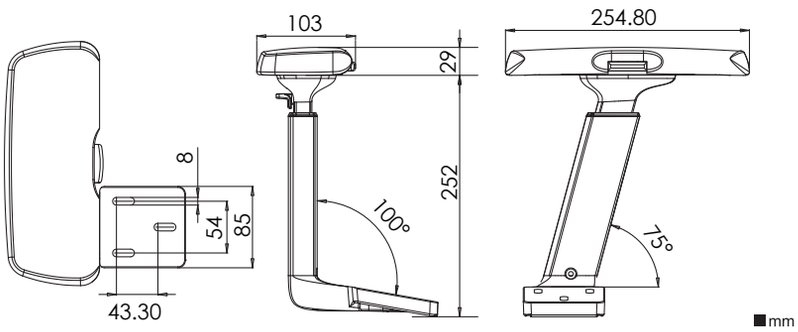

CH-802A-299

features

Aluminum armrest carrier with inward slide PU Pad.
Height adjustment 100mm.
SB016-width adjustment 40mm.

colour options

white grey black

pad function

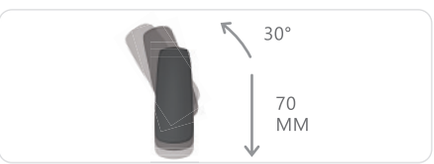

width adjuster

SB016

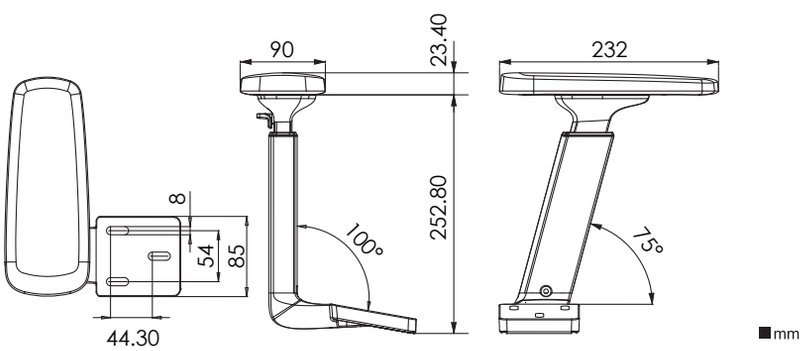

All spec. and rights are subject to change without notice.

CH-802A-295

features

Aluminum armrest carrier with depth and swivel Pad lock at any position.
Height adjustment 100mm.
SB016-width adjustment 40mm.

colour options

white | grey | black

pad function

width adjuster

SB016

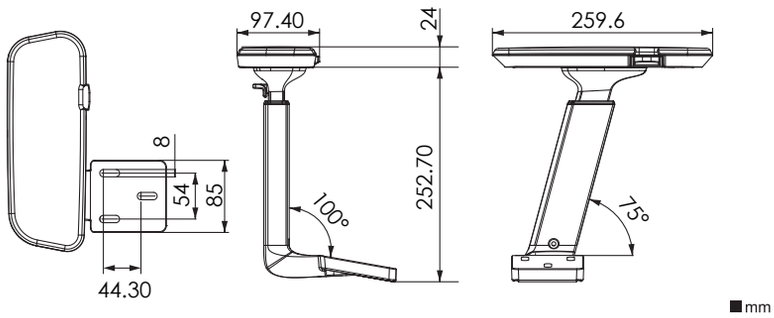

CH-803A

features

Armrest carrier in aluminum.
100mm height adjustment.
100mm PU Pad fixed hole.
SB016-width adjustment 40mm.

colour options

white | grey | black

Pad optional available

All fixed PU Pads

width adjuster

SB016

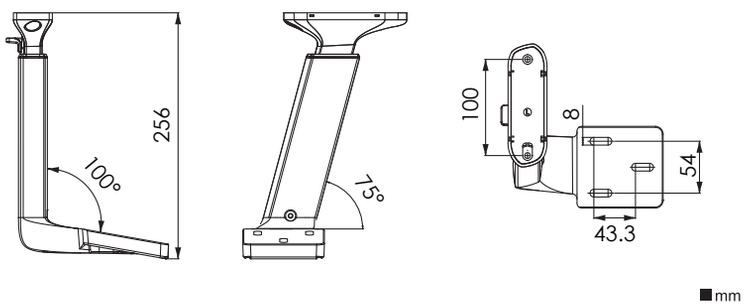

CH-690

features

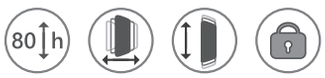

Plastic armrest carrier with 3D armpad.
Height adjustment 80mm.

colour options

white | grey | black

shipping spec.

8pcs / ctn
6.15kgs / N.W
7.15kgs / G.W
1.67′ / cu′ft

pad function

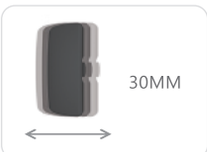

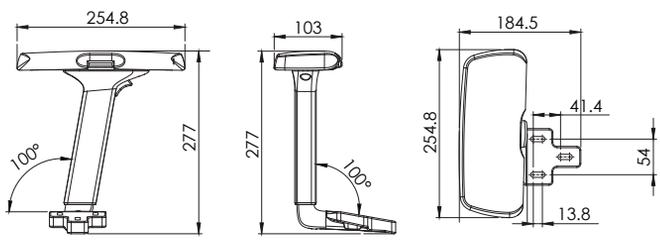

■mm

CH-697

features

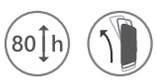

Plastic armrest carrier with inward slide PU Pad.
Height adjustment 80mm.

colour options

white | grey | black

shipping spec.

8pcs / ctn
6.15kgs / N.W
7.15kgs / G.W
1.67′ / cu′ft

pad function

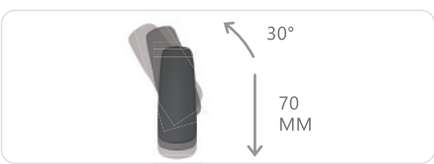

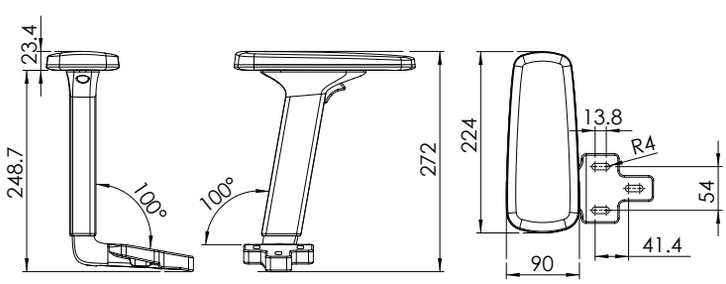

■mm

All spec. and rights are subject to change without notice.

CH-691

features

100 p | 80 h

Armrest Carrier in plastic.
Height adjustment 80mm.
100mm PU Pad fixed hole.

colour options

white | grey | black

shipping spec.

12pcs / ctn
4.8kgs / N.W
5.8kgs / G.W
0.85′ / cu′ft

Pad optional available

All fixed PU Pads

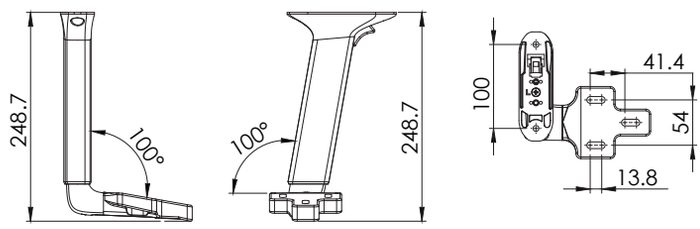

■mm

CH-698

features

80 h

Plastic armrest carrier with depth and swivel Pad lock at any position.
Height adjustment 80mm.

colour options

white | grey | black

shipping spec.

8pcs / ctn
6.25kgs / N.W
7.25kgs / G.W
1.67′ / cu′ft

pad function

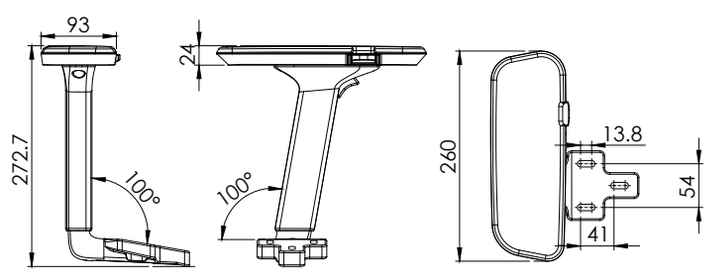

■mm

All spec. are for general viewing only.

CH-650B1

features

Plastic armrest with 3D armpad.
100mm height adjustment.
54 mm mounting pattern.

colour options

white | grey | black

shipping spec.

8pcs / ctn
7.65kgs / N.W
8.65kgs / G.W
1.71' / cu'ft

pad function

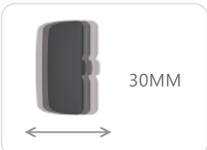

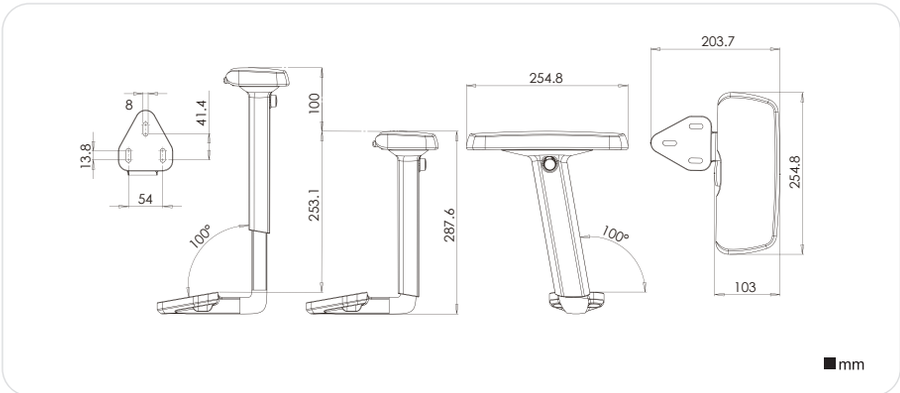

CH-651B1

features

Plastic armrest.
Fix pad or depth adjustment pad available.
100mm height adjustment.
54 mm mounting pattern.

colour options

white | grey | black

shipping spec.

12pcs / ctn
7.5kgs / N.W
8.5kgs / G.W
1.17' / cu'ft

Pad optional available

All fixed PU Pads

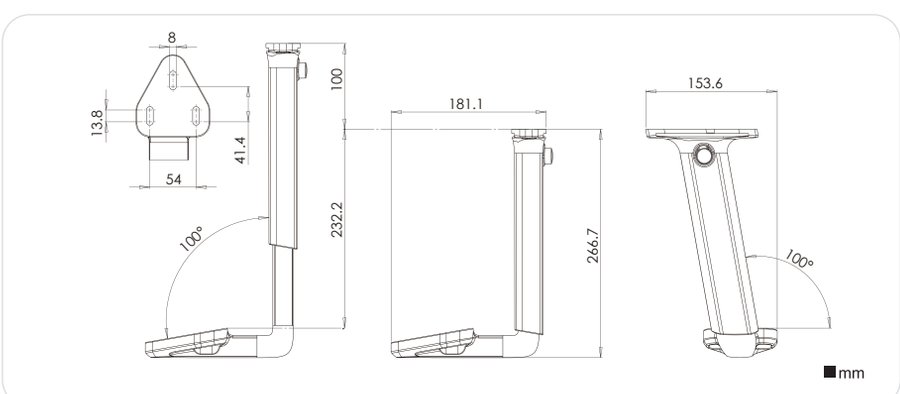

All spec. and rights are subject to change without notice.

CH-650B1-B01

features

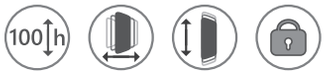

Plastic armrest with 3D armpad.
100mm height adjustment.
Slot style mounting.

colour options

white | grey | black

shipping spec.

8pcs / ctn
7.65kgs / N.W
8.65kgs / G.W
1.71′ / cu′ft

pad function

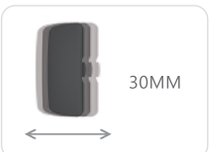

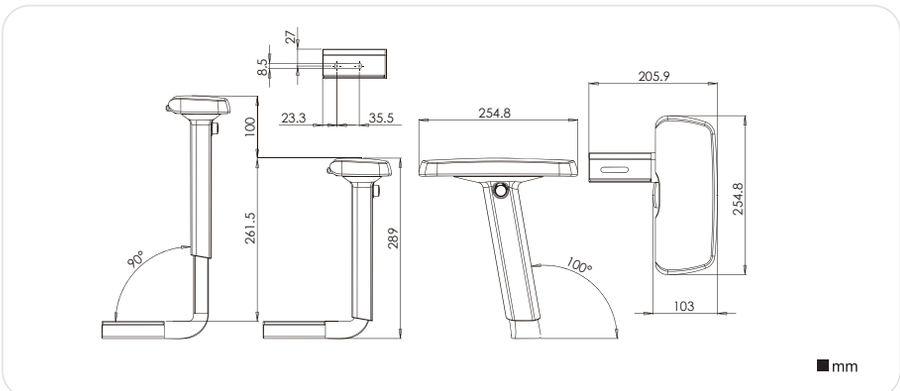

CH-651B1-B01

features

Plastic armrest.
Fix pad or depth adjustment pad available.
100mm height adjustment.
Slot style mounting.

colour options

white | grey | black

shipping spec.

12pcs / ctn
7.5kgs / N.W
8.5kgs / G.W
1.17′ / cu′ft

Pad optional available

All fixed PU Pads

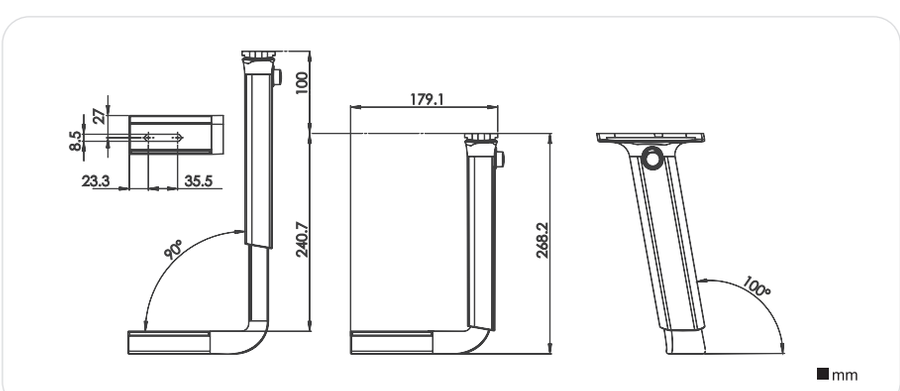

All spec. are for general viewing only.

CH-658

features

Plastic armrest carrier with depth and swivel Pad lock at any position.
Height adjustment 100mm.

colour options

white grey black

shipping spec.

8pcs / ctn
7.65kgs / N.W
8.65kgs / G.W
1.71' / cu'ft

pad function

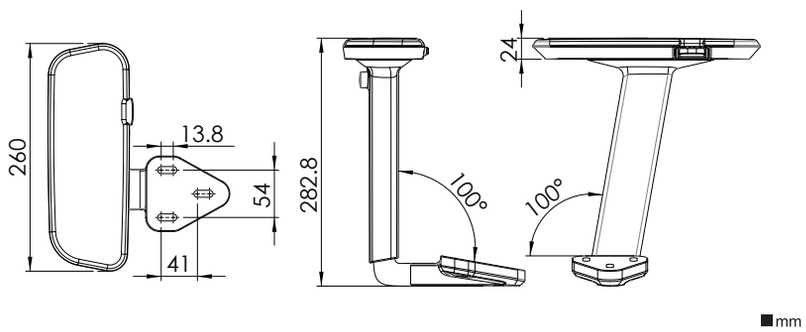

CH-681

features

Armrest Carrier in plastic.
Width adjustment 40mm.
(Width function by using CH-562 kit)
Height adjustment 80mm.
Quick Assembly System.

colour options

white grey black

shipping spec.

12pcs / ctn
6.7kgs / N.W
7.7kgs / G.W
0.98' / cu'ft

Pad optional available

CH-295 PU ,CH-296 PU ,
CH-297 PU ,CH-298 PU ,
CH-215 PU ,CH-219-2 PU

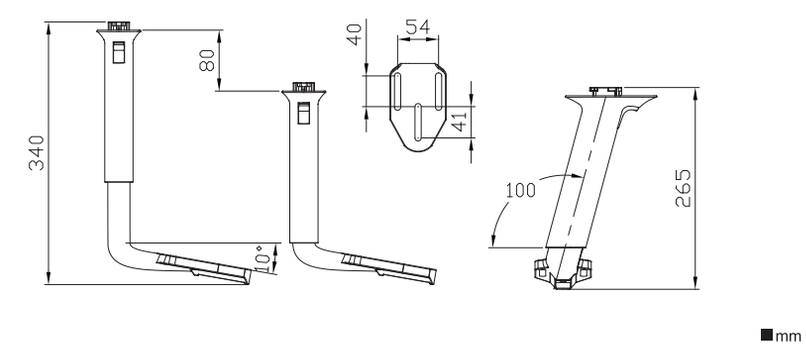

All spec. and rights are subject to change without notice.

CH-680

features

Plastic armrest carrier with 3D armpad.
3D armpad with lock at any position.

colour options

white | grey | black

shipping spec.

8pcs / ctn
7.6kgs / N.W
8.6kgs / G.W
2.1' / cu'ft

pad function

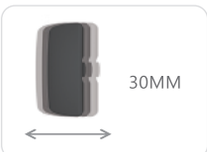

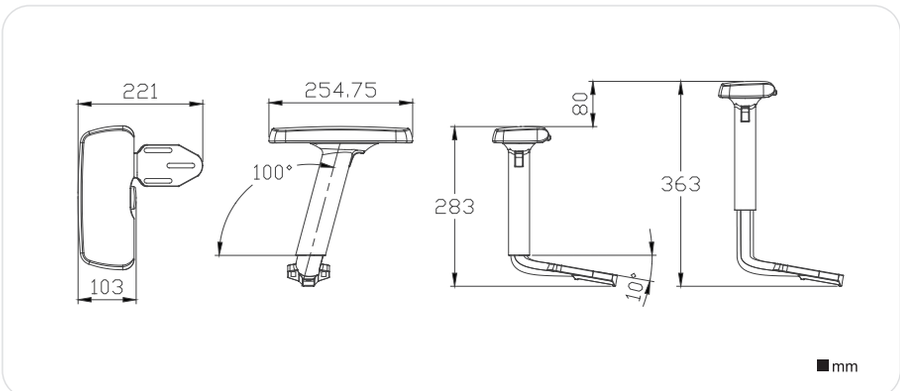

CH-687

features

Plastic armrest carrier with inward slide PU Pad.
Height adjustment 80mm.

colour options

white | grey | black

shipping spec.

8pcs / ctn
7.55kgs / N.W
8.55kgs / G.W
1.71' / cu'ft

pad function

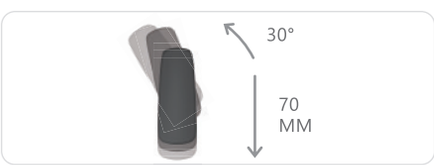

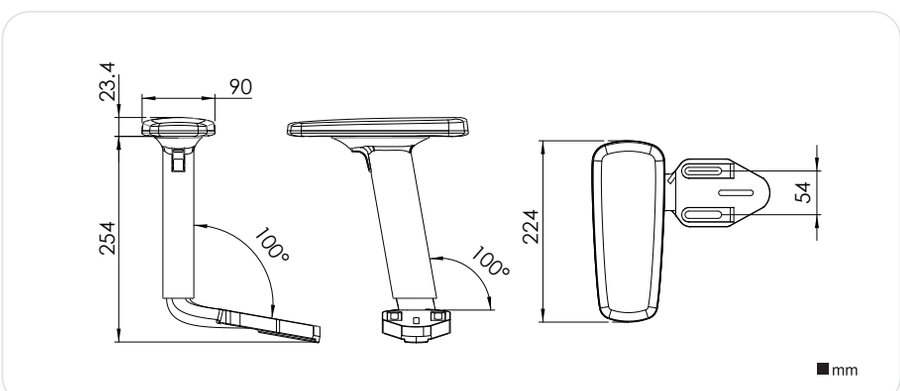

CH-630

features

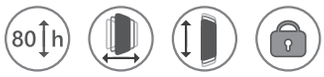

Plastic armrest carrier with 3D armpad.
3D armpad with lock at any position.

*Patent. TW I359001
CN 200810176452.X

colour options

white grey black

shipping spec.

8pcs / ctn
6.8kgs / N.W
7.8kgs / G.W
1.68' / cu'ft

pad function

30MM

50 MM

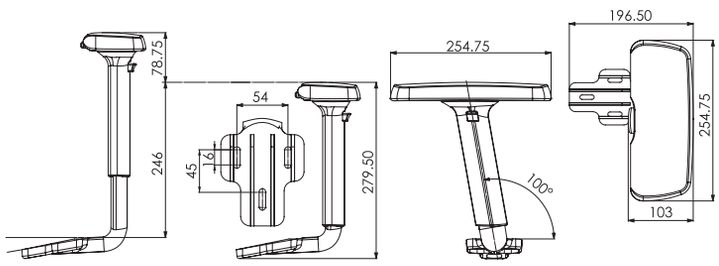

CH-632

features

Aluminum armrest carrier with 3D armpad.
Width adjuster available.

*Patent. TW I359001
CN 200810176452.X

colour options

white grey black

shipping spec.

8pcs / ctn
9.3kgs / N.W
10.3kgs / G.W
1.68' / cu'ft

pad function

30MM

50 MM

width adjuster

SB013

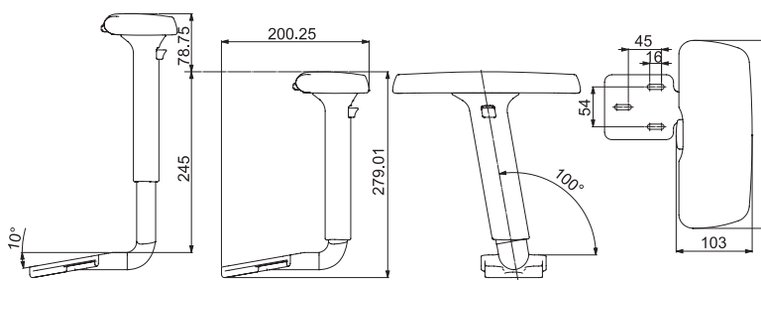

All spec. and rights are subject to change without notice.

CH-631

Pad optional available

All fixed PU Pads

features

100 p | 80 h

Plastic armrest carrier.
80mm height adjustment.
Fix pad or depth adjustment pad available.

*Patent. TW I359001
CN 200810176452.X

colour options

white | grey | black

shipping spec.

12pcs / ctn
5.5kgs / N.W
6.5kgs / G.W
0.95' / cu'ft

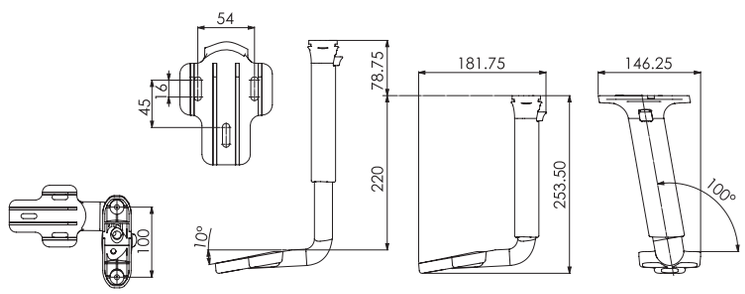

CH-633

Pad optional available

All fixed PU Pads

features

100 p | 80 h

Aluminum armrest carrier.
Fix pad or depth adjustment pad available.
Width adjuster available.

*Patent. TW I359001
CN 200810176452.X

colour options

white | grey | black

shipping spec.

12pcs / ctn
9.5kgs / N.W
10.5kgs / G.W
0.93' / cu'ft

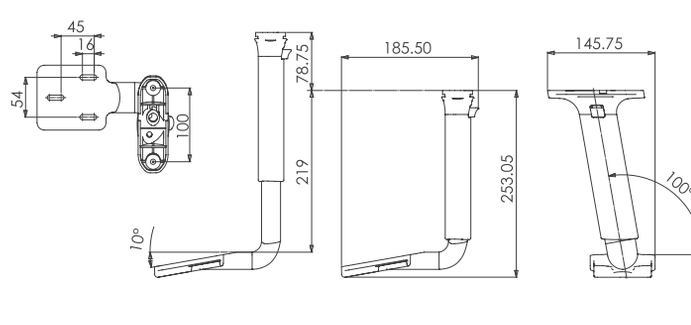

width adjuster

SB013

All spec. are for general viewing only.

CH-635

features

Plastic armrest carrier with depth and swivel Pad.
Height adjustment 80mm.
*Patent. TW I359001
CN 200810176452.X
TW M262105
CN 200420049734

colour options

white | grey | black

shipping spec.

8pcs / ctn
6.6kgs / N.W
7.6kgs / G.W
1.66' / cu'ft

pad function

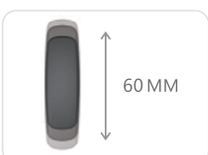

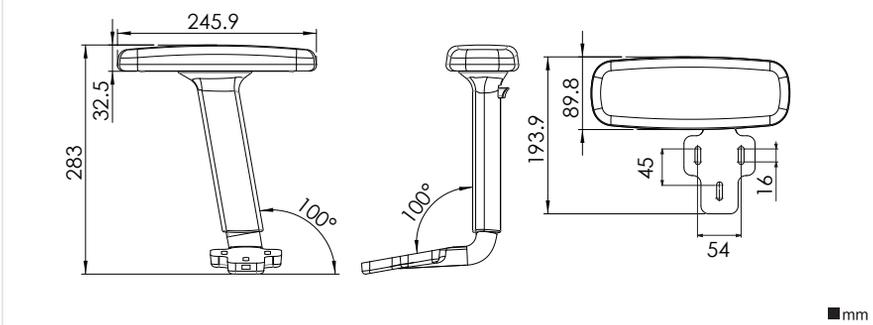

CH-637

features

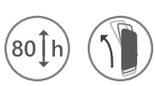

Plastic armrest carrier with inward slide PU Pad.
Height adjustment 80mm.

*Patent. TW I359001
CN 200810176452.X

colour options

white | grey | black

shipping spec.

8pcs / ctn
6.6kgs / N.W
7.6kgs / G.W
1.66' / cu'ft

pad function

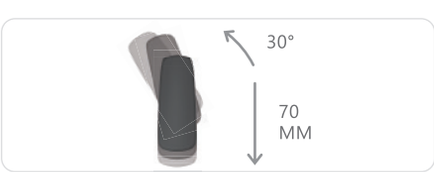

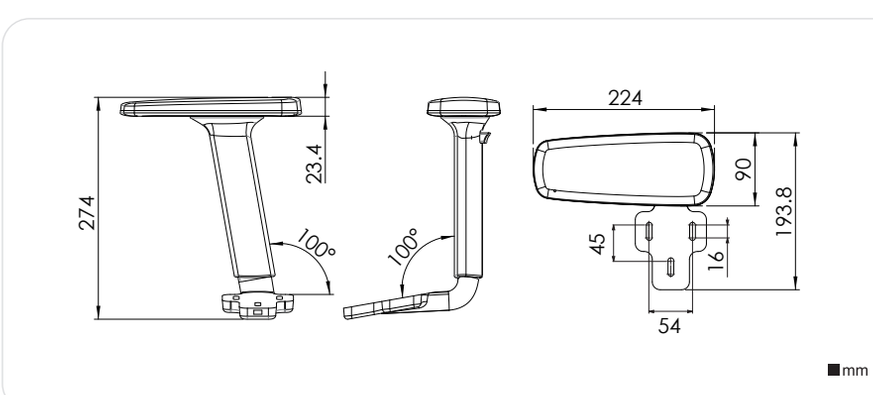

All spec. and rights are subject to change without notice.

CH-636

features

Aluminum armrest carrier with depth and swivel Pad.
Height adjustment 80mm.
*Patent. TW I359001
CN 200810176452.X
TW M262105
CN 200420049734

colour options

white | grey | black

shipping spec.

8pcs / ctn
9.4kgs / N.W
10.4kgs / G.W
1.72' / cu'ft

pad function

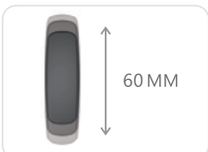

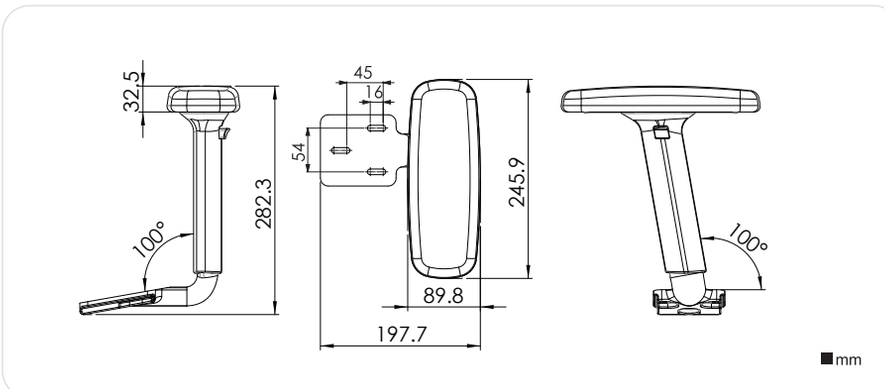

CH-638

features

Plastic armrest carrier with depth and swivel Pad lock at any position.
Height adjustment 80mm.

*Patent. TW I359001
CN 200810176452.X

colour options

white | grey | black

shipping spec.

8pcs / ctn
6.8kgs / N.W
7.8kgs / G.W
1.68' / cu'ft

pad function

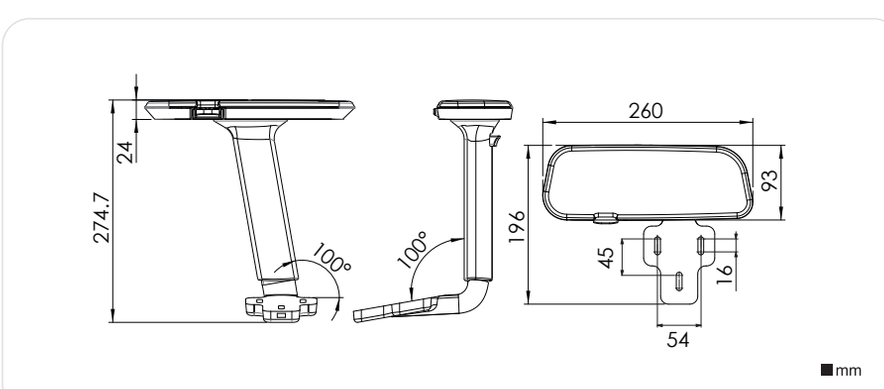

CH-552-B01

Pad optional available

All fixed PU Pads

features

100 p | 80 h

Plastic armrest carrier.
80mm height adjustment.
Fix pad or depth adjustment pad available.
Slot style mounting.
*Patent. TW I359001
CN 200810176452.X

colour options

white | grey | black

shipping spec.

12pcs / ctn
6.7kgs / N.W
7.7kgs / G.W
0.96' / cu'ft

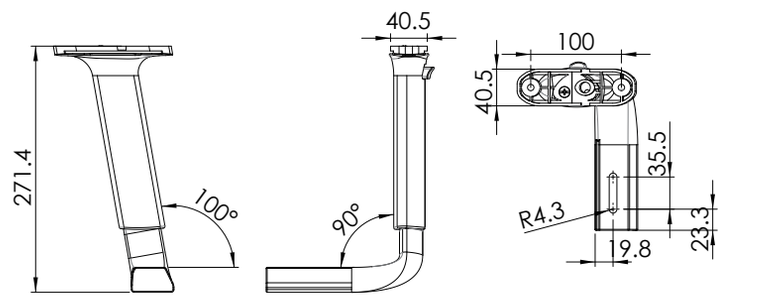

CH-570-B01

Pad optional available

All fixed PU Pads

features

100 p | 80 h

Aluminum armrest carrier.
Fix pad or depth adjustment pad available.
Width adjuster available.
Slot style mounting.
*Patent. TW I359001
CN 200810176452.X

colour options

white | grey | black

shipping spec.

12pcs / ctn
9.45kgs / N.W
10.12kgs / G.W
0.96' / cu'ft

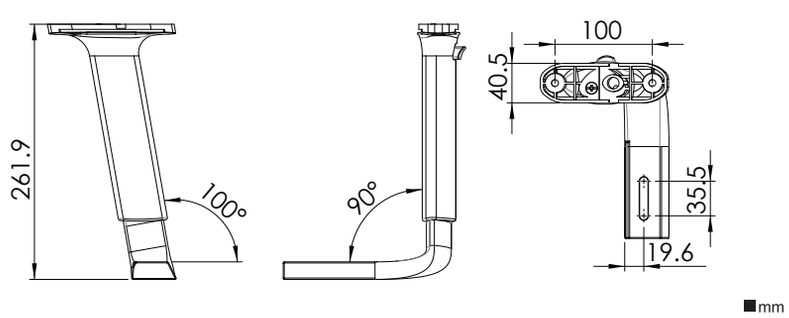

All spec. and rights are subject to change without notice.

CH-552-B02

features

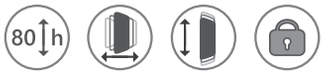

Plastic armrest carrier with 3D armpad.
3D armpad with lock at any position.
Slot style mounting.

*Patent. TW I359001
CN 200810176452.X

colour options

white | grey | black

shipping spec.

8pcs / ctn
7.4kgs / N.W
8.4kgs / G.W
1.7' / cu'ft

pad function

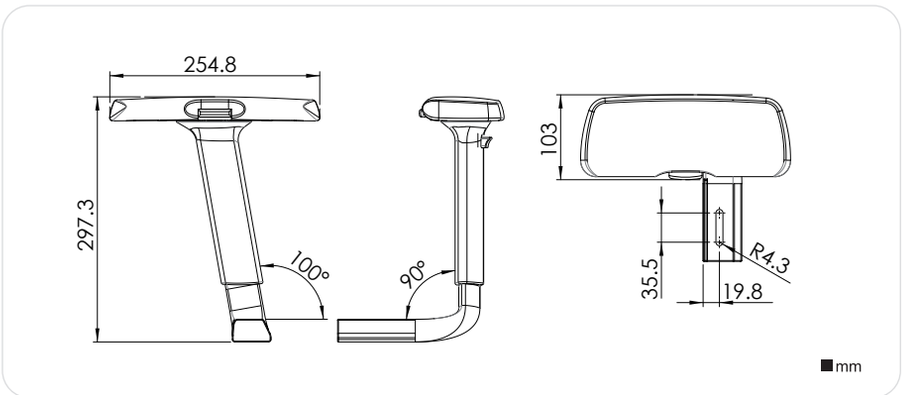

CH-570-B02

features

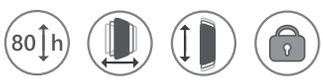

Aluminum armrest carrier with 3D armpad.
Width adjuster available.
Slot style mounting.
*Patent. TW I359001
CN 200810176452.X

colour options

white | grey | black

shipping spec.

8pcs / ctn
10.4kgs / N.W
11.4kgs / G.W
1.7' / cu'ft

pad function

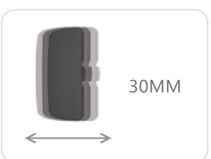

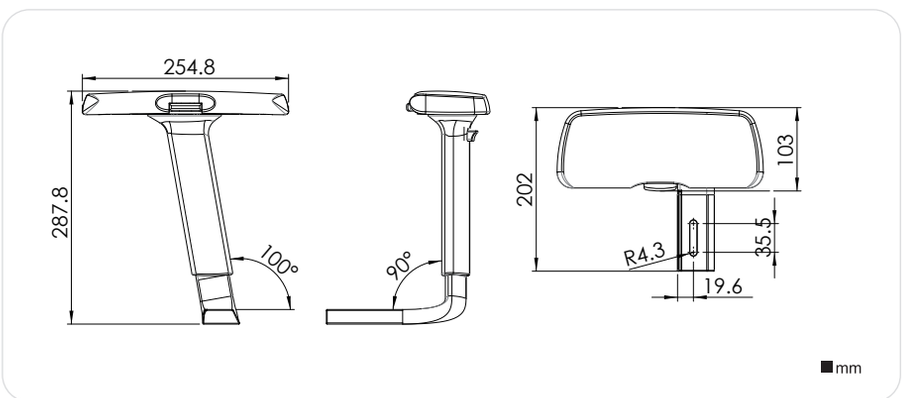

SP-628

Pad optional available

All fixed PU Pads

features

Chrome (SP-628A),Black(SP-628B)
soft touch button
80mm height adjustment.
Fix pad or depth adjustment pad available.
*Patent. TW I297597
CN 200620004110.6

shipping spec.

12pcs / ctn
12kgs / N.W
13kgs / G.W
1.07' / cu'ft

width adjuster

SB012

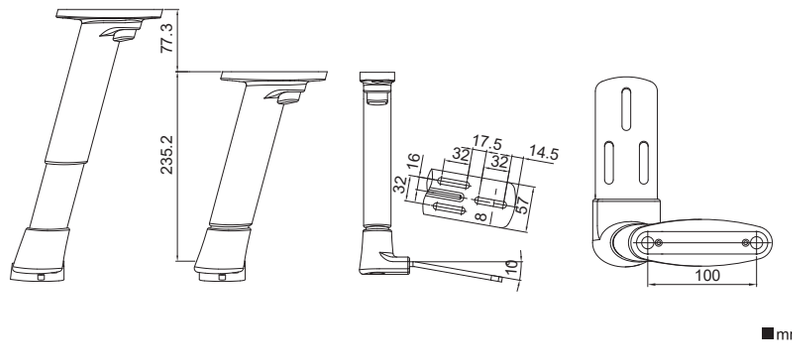

CH-620

Pad optional available

All fixed PU Pads

features

80mm height adjustment.
Fix pad or depth adjustment pad available.
*Patent. US D506337
CN 200430062122.0
TW I297597
CN 200620004110.6

shipping spec.

12pcs / ctn
11.76kgs / N.W
12.26kgs / G.W
1.2' / cu'ft

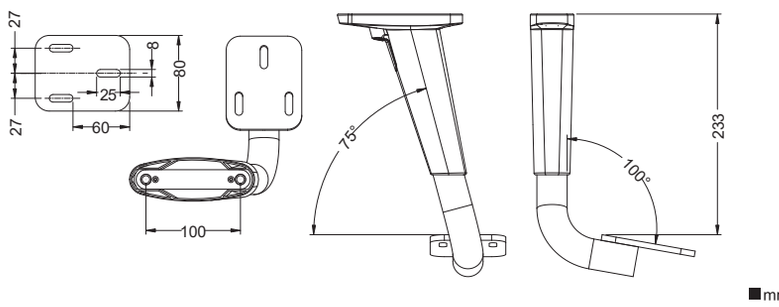

All spec. and rights are subject to change without notice.

CH-618A

features

Chrome (CH-618A)
Black(CH-618B)

*Patent. TW M262105
TW I271173
CN 200420049734
CN 200620018402.5

shipping spec.

10pcs / ctn
14kgs / N.W
15kgs / G.W
2.12' / cu'ft

pad function

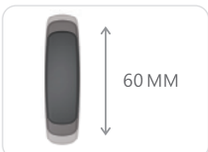

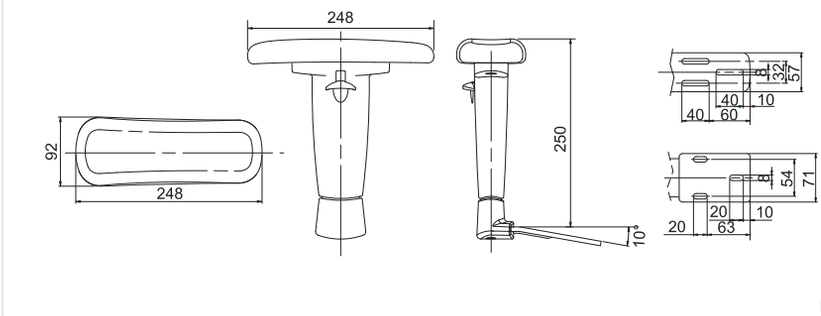

CH-617A

features

Chrome (CH-617A)
Black(CH-617B)

*Patent. TW I271173
CN 200620018402.5

shipping spec.

12pcs / ctn
11.7kgs / N.W
12.7kgs / G.W
0.95' / cu'ft

Pad optional available

All fixed PU Pads

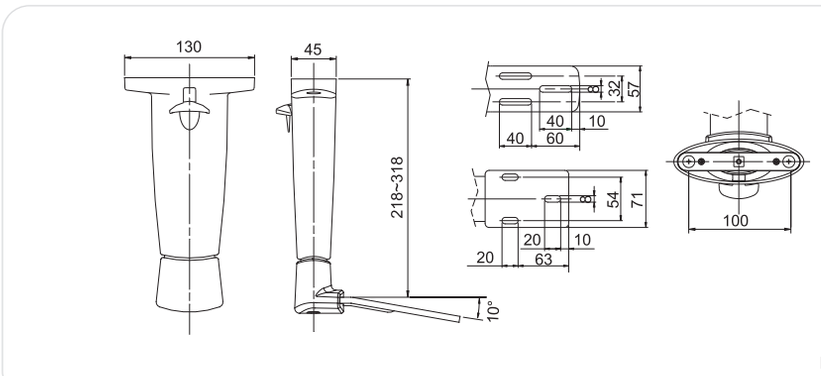

All spec. are for general viewing only.

CH-613

features

100 p 80 h

Black

*Patent. CN 01264087.5

shipping spec.

15pcs / ctn
17.5kgs / N.W
18.5kgs / G.W
2.1' / cu'ft

Pad optional available

All fixed PU Pads

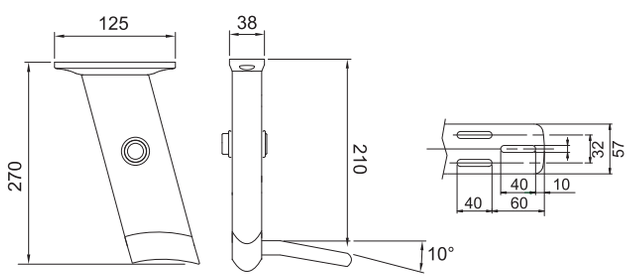

■mm

CH-612A

features

80 h

Chrome (CH-612A)
Black(CH-612B)

*Patent. US D471388
TW 212100
CN 02351144.3

shipping spec.

12pcs / ctn
9.5kgs / N.W
10.5kgs / G.W
3.28' / cu'ft

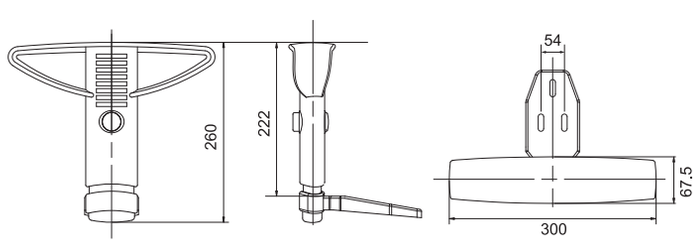

■mm

All spec. and rights are subject to change without notice.

CH-610A

Pad optional available

All fixed PU Pads

features

Chrome (CH-610A)
Black(CH-610B)

*Patent. TW I271173
TW 206019
CN 200620018402.5

shipping spec.

12pcs / ctn
12kgs / N.W
13kgs / G.W
0.95' / cu'ft

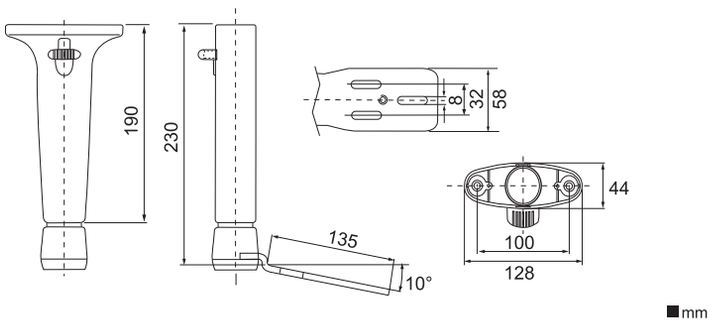

CH-610C

Pad optional available

All fixed PU Pads

features

*Patent. TW I271173
TW 206019
CN 200620018402.5

shipping spec.

12pcs / ctn
12kgs / N.W
13kgs / G.W
1.43' / cu'ft

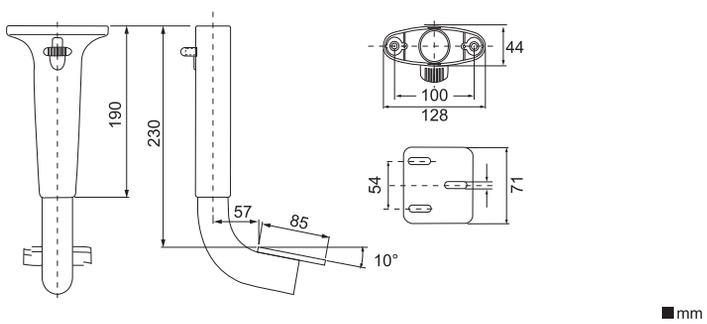

All spec. are for general viewing only.

CH-609A

Pad optional available

All fixed PU Pads

features

100 p | 80 h

Chrome (CH-609A)
Black(CH-609B)

*Patent. TW I271173
CN 200620018402.5
CN 01264087.5

shipping spec.

30pcs / ctn
24kgs / N.W
25kgs / G.W
2.1' / cu'ft

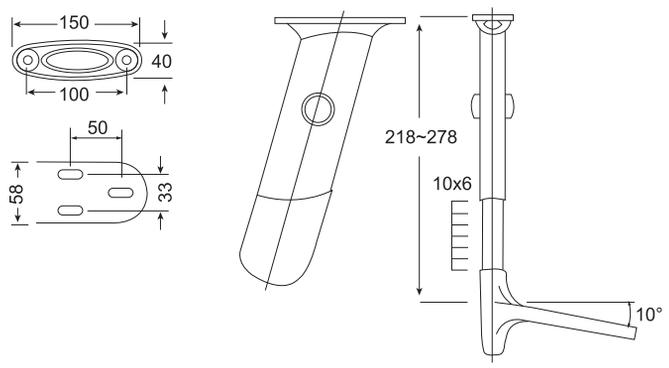

CH-608

Pad optional available

All fixed PU Pads

features

100 p | 80 h

Height Adjustable Armrest
Adjustable up and down
design in 7 steps.

shipping spec.

12pcs / ctn
12kgs / N.W
13kgs / G.W
0.57' / cu'ft

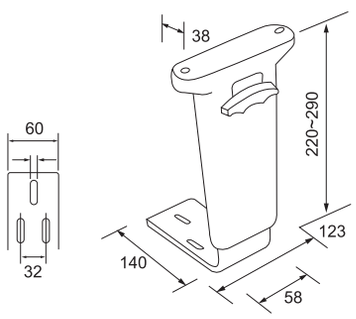

All spec. and rights are subject to change without notice.

SB012

features

Width adjuster with 33mm hole pattern.

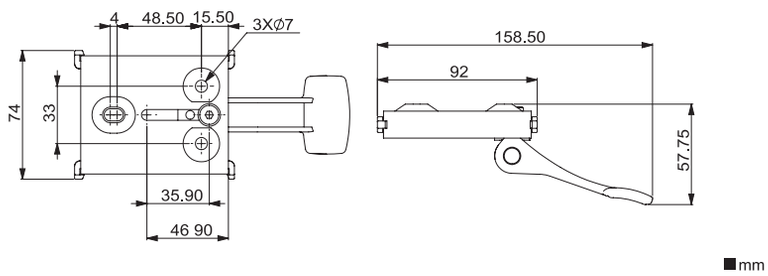

Available For

SP-628 armrests

SB013

features

Width adjuster with 54mm hole pattern.

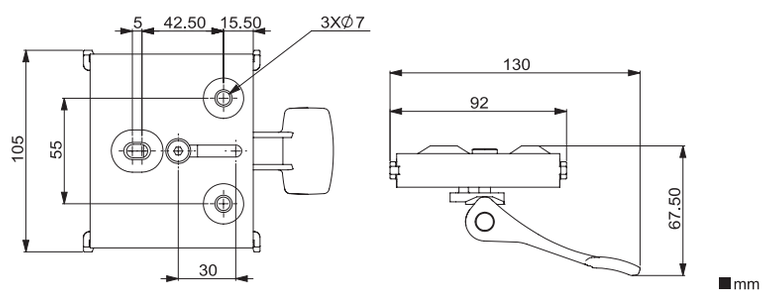

Available For

CH-632 Armrests
CH-633 Armrests

SB016

features

Width adjuster with 54mm hole pattern.

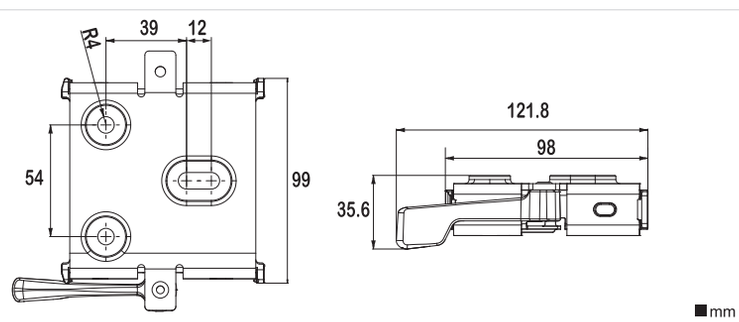

Available For

CH-800 series

All spec. are for general viewing only.

CH-180

shipping spec.

20pcs / ctn
14kgs / N.W
15kgs / G.W
2.82′ / cu′ft

*Patent. TW D111667

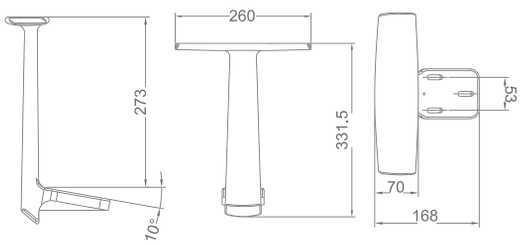

CH-172A PP

shipping spec.

16pcs / ctn
22kgs / N.W
23kgs / G.W
3.54′ / cu′ft

*Patent. US D448955
TW 75956

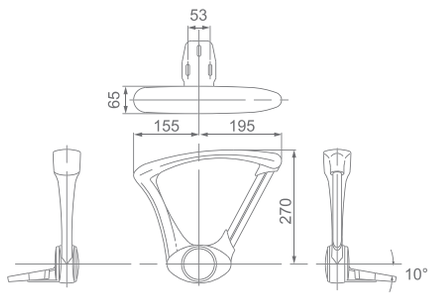

CH-166 PP

shipping spec.

24pcs / ctn
15kgs / N.W
16kgs / G.W
3.0′ / cu′ft

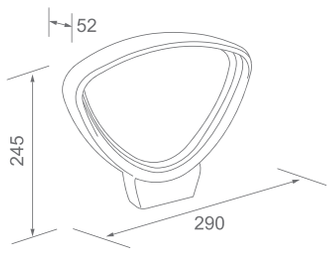

CH-163 NA PP

shipping spec.

16pcs / ctn
12kgs / N.W
13kgs / G.W
2.98′ / cu′ft

*Patent. US D431402

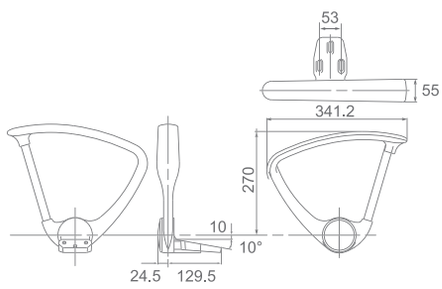

All spec. and rights are subject to change without notice.

CH-163NC PP

shipping spec.

16pcs / ctn
12.4kgs / N.W
13.4kgs / G.W
3.1′ / cu′ft

*Patent. US D431402

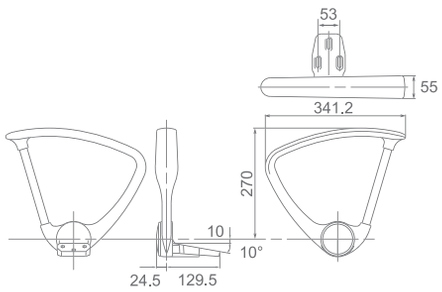

CH-162 PP

shipping spec.

20pcs / ctn
18kgs / N.W
19kgs / G.W
3.8′ / cu′ft

*Patent. US 6161900
TW 159698

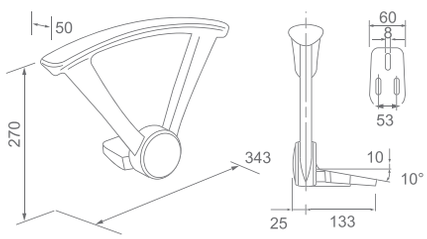

CH-161 PP

shipping spec.

20pcs / ctn
15kgs / N.W
16kgs / G.W
2.87′ / cu′ft

*Patent. TW 71265

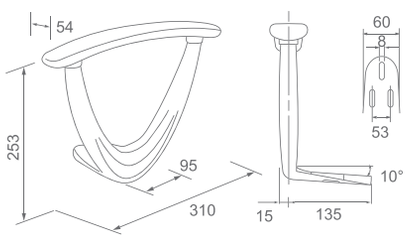

CH-238 PP

shipping spec.

20pcs / ctn
13kgs / N.W
14kgs / G.W
2.7′ / cu′ft

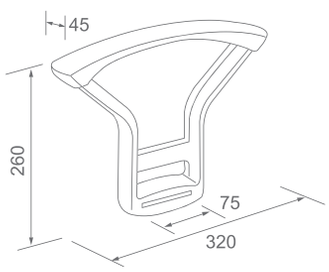

Sales Contact

Tony

tony.tsai@chsing.com

Heidi

heidi.wu@chsing.com

Joy

joy.pan@chsing.com

Annie

annie.chao@chsing.com